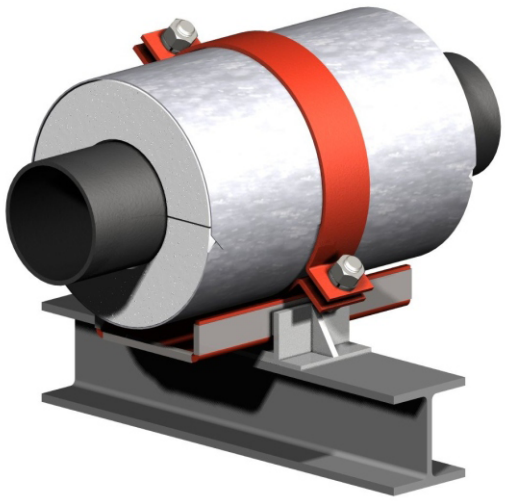

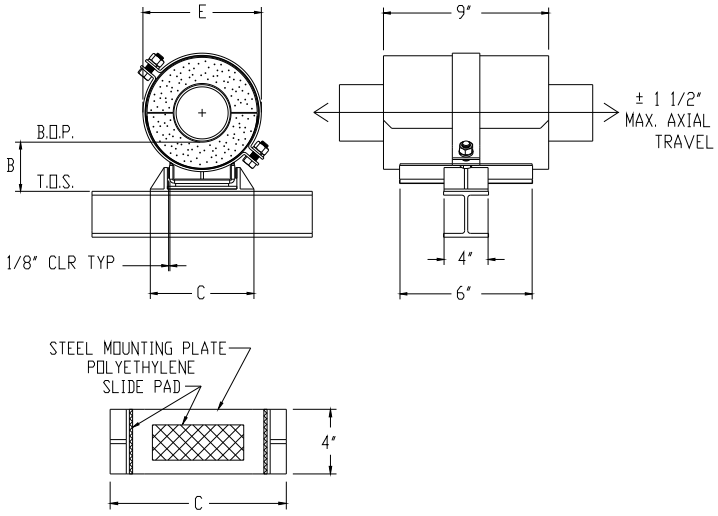

Contact factory for other dimensional, temperature, load, or axial travel, requirements. If lateral load is greater than 50% of actual vertical load, contact factory.
The load ratings represent average values obtained in accordance with accepted test methods and are subject to normal manufacturing variations.
Dimensions and ratings are subject to change without notice.

Note: For higher load ratings, see: B7300 - For greater axial travel, see: B8200 - For lateral travel, see: B5200

Pipe	Vert.	Insul. Thk. = 1"			Insul. Thk. = 1-1/2"			Insul. Thk. = 2"			Insul. Thk. = 2-1/2"			Insul. Thk. = 3"			Insul. Thk. =4"			Insul. Thk. = 5"		
Size	Load	B	C	E	B	C	E	B	C	E	B	C	E	B	C	E	B	C	E	B	C	E
1/2	375	4	5	3.25	4	5.5	4.375	4	6	5.375	4	7.5	7	6	8	8	6	10	10	8	11.5	12.125
3/4	465	4	5	3.25	4	5.5	4.375	4	6	5.375	4	7.5	7	6	8	8	6	10	10	8	11.5	12.25
1	600	4	5.5	4	4	6	5	4	6.5	6.062	4	7.5	7.125	6	8	8.125	6	10	10.125	8	11.5	12.25
1 1/2	870	4	6	4.5	4	6.5	5.5	4	8	7.125	4	8.5	8.125	6	9.5	9.125	6	11.5	11.25	8	13	13.25
2	1005	4	7	5	4	7.5	6.1875	4	8.5	7.125	4	9	8.125	6	10	9.125	6	12	11.25	8	13.5	13.25
2 1/2	1230	4	7	5.5	4	8.5	7.125	4	9	8.125	4	10	9.125	6	11	10.125	6	12.5	12.25	8	14	14.5
3	1425	4	7.5	6.187	4	8.5	7.125	4	9	8.125	4	10	9.125	6	11	10.125	6	12.5	12.375	8	14	14.625
4	2250	4	9.5	7.25	4	10	8.25	4	11	9.25	4	12	10.25	6	13	11.375	6	14.5	13.375	8	16	15.625
5	2820	4	12.5	8.5	4	13	9.5	4	14.5	10.5	4	16	11.625	6	17	12.625	6	19	14.875	8	20.5	16.875
6	3420	4	12	9.5	4	13.5	10.5	4	15	11.625	4	16	12.625	6	17.5	13.625	6	18.5	15.875	8	20.5	17.875
8	4500	4	16	11.625	4	17	12.625	4	18.5	13.625	6	19	14.875	6	20	15.875	6	21.5	18.125	8	23	20.125
10	5400	4	19	13.875	4	19.5	15.125	4	20.5	16.125	6	21	17.125	6	22	18.125	6	23.5	20.125	8	25.5	22.125
12	5850	4	21	16.125	4	21.5	17.125	4	22.5	18.125	6	23.5	19.125	6	24	20.125	6	26	22.125	8	27.5	24.125
14	6750	4	22	17.125	4	23	18.125	4	24	19.125	6	24.5	20.125	6	25.5	21.125	6	27.5	23.125	8	28.5	25.125
16	7800	4	23.5	19.375	4	24	20.375	6	25	21.375	6	26	22.375	6	27	23.375	8	28	25.375	8	29	27.375
18	8550	4	25.5	21.375	4	26.5	22.375	6	27.5	23.375	6	28	24.375	6	28.5	25.375	8	29.5	27.375	8	31	29.375
20	9150	4	28	23.375	4	28.5	24.375	6	29	25.375	6	29.5	26.375	6	30	27.375	8	31.5	29.375	8	33	31.375
24	9600	4	31	27.375	4	32	28.375	6	32.5	29.375	6	33	30.375	6	34	31.375	8	35.5	33.375	8	37	35.375
30	12600	4	37	33.625	6	38	34.625	6	38.5	35.625	6	39.5	36.625	6	40.5	37.625	8	42	39.625	8	43.5	41.625
36	14700	4	43	40.125	6	43.5	41.125	6	44.5	42.125	6	45.5	43.125	6	46	44.125	8	47.5	46.125	8	49.5	48.125
42	16650	4	49	46.125	6	50	47.125	6	51	48.125	6	51.5	49.125	6	52.5	50.125	8	54	52.125	8	55.5	54.125

Application:

Model B7200 is designed for use on:
- Hot Water
- Vacuum
- Gas
- Cold Water
- Steam
- Air
- Dual Temperature
- Chilled Water

Intended for installation on:
- Flat Surfaces

Temperature Range: + 40° F to +1200° F
Note: Up to 1700° F available upon request.

Features:

- All pipe sizes
- Easy Installation
- Eliminates welding to pipe
- Overlapping galvanized sheet metal jacket
- Insulating structural inserts for load transfer
- Stainless steel to UHMW polyethylene slide
- Other I.D. 's and/or O. D.'s available on request
- Factory mounted polyethylene slide pad on steel mounting plate

Performance Test Results on File:
Available upon request.

Material Data:

- B7200: Applicable PSI spec. doc.: No. 209.
- Insulation: Calcium Silicate asbestos-free, treated with water repellant.
- Jackets: Galvanized Steel ASTM A-527.
- Glue: Industrial contact adhesive
- Structural Inserts: High-density calcium silicate asbestos free, treated with water repellant.
- Steel Straps/Base: Carbon Steel ASTM A-36.
- Fasteners: ASTM A-307 plated.
- Slide Pad: UHMWP olyethylene (Teflon Optional).
- Coating: Primer coated or hot dipped galvanized. Other coatings available upon request.

Formal Submittal Sheets available.