FIG. PTP 100-G CONSTANT

www.pipingtech.com/ptp100-g

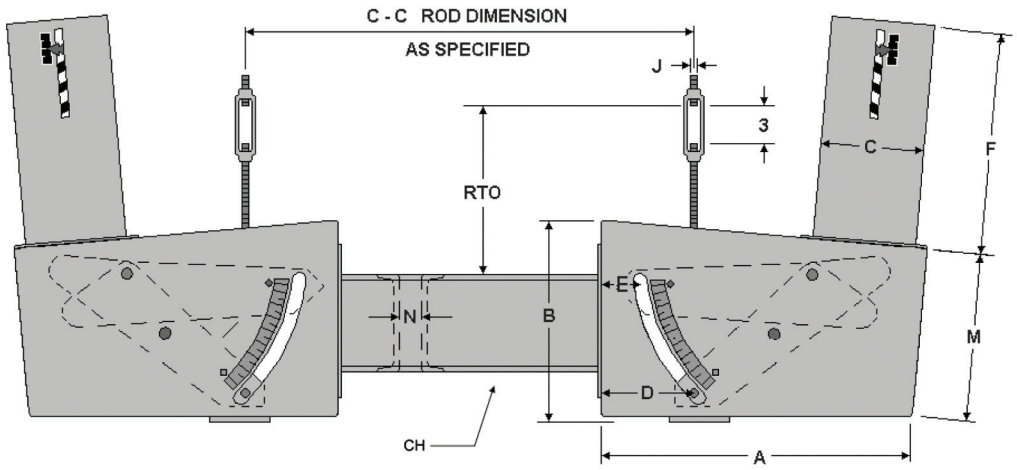

* Drawing shown for down travel

Figure PTP 100-G assembly consists of two inverted vertical constants attached with a channel as shown above. The constants are suspended via J-Rods from a beam. The whole assembly moves through the total travel. The load ranges in the tables below are half the total load lifted by the assembly, with the pipe line seated in the center of the C-C dimension, where each constant carries half the total load. The load each constant carries must include half of the assembly's weight as the whole assembly moves. Note that if the pipe line is not centered in the C-C dimension, then one constant in the assembly will carry a heavier load than the other. If this is the case then each constant could be a different size and the tables below might not apply. Please call for dimensions on such special designs.

ORDERING: Specify size, figure number, type, load, actual travel, total travel, direction of travel, and C-C dimension. For load and travel not in the tables, please call for dimensions.

IMPORTANT NOTES: All dimensions are in inches unless otherwise noted.

- RTO - Rod take out for down travel
- D - J-Rod position for down travel
- E - J-Rod position for up travel
- F - Maximum length for the load range
- L - See side view of Fig. PTP 100-D
- WT - Approximate weight for the load range
- CH - Size of channel

J-Rod Selection

LOAD (lb.)	0 765	766 1491	1492 2402	2403 3868	3869 5663	5664 9121	9122 13354	13355 17775	17776 23659	23660 28627	28628 38103	38104 46104	46105 60000
J-ROD	1/2	5/8	3/4	1	1 1/4	1 1/2	1 3/4	2	2 1/4	2 1/2	2 3/4	3	3 1/4

Total Travel 1 1/2 to 4 inches

LOAD RANGE (lb.)	J-ROD	RTO*	A	B	C	D	E	F	L	M	N	CH (lb./ft)	WT (lb.)
44 - 243	1/2	7 5/8	16 3/8	9 11/16	6 5/8	3 3/4	2	12	7 5/8	8	1	3 x 4.1	60
244 - 1018	1/2	6 7/8	17 3/8	10 1/8	8 5/8	3 3/4	2	15	11 5/8	8 3/8	1	4 x 5.4	95
	5/8	6 7/8											
1019 - 3516	5/8	5 1/2	17 3/8	11 1/8	8 5/8	3 3/4	2	22	11 5/8	9 1/4	1 1/4	6 x 10.5	215
	3/4	5 1/2											
	1	7 1/2											

*Rod Take Out (RTO) is for down travel [Add 4 inches for up travel]

CONSTANTS_100.XLS-09/17/09

FIG. PTP 100-G CONSTANT

www.pipingtech.com/ptp100-g

Total Travel 1 1/2 to 4 inches

LOAD RANGE (lb.)	J-ROD	RTO*	A	B	C	D	E	F	L	M	N	CH (lb./ft)	WT (lb.)
3517 - 7538	1	5 3/8	20 3/8	12 1/2	8 5/8	4 5/16	2 9/16	33	11 5/8	10 1/8	1 1/2	10 x 15.3	345
	1 1/4	6 3/8											
	1 1/2	6 5/8											
7539 - 16159	1 1/2	5 1/8	23 9/16	15 3/8	12 3/4	5 9/16	3 7/8	44	18 3/8	12 5/8	2 1/8	12 x 20.7	975
	1 3/4	6 5/8											
	2	10 5/8											
16160 - 31490	2	9 1/2	24 1/4	18 15/16	12 3/4	6 3/4	5	58	18 3/8	16 1/16	2 7/8	15 x 33.9	1,540
	2 1/4	11 1/2											
	2 1/2	11 1/2											
	2 3/4	13 1/2											

*Rod Take Out (RTO) is for down travel [Add 4 inches for up travel]

Total Travel 4 1/2 to 6 inches

LOAD RANGE (lb.)	J-ROD	RTO*	A	B	C	D	E	F	L	M	N	CH (lb./ft)	WT (lb.)
34 - 183	1/2	6 7/16	18 11/16	12	6 5/8	4 1/2	1 7/8	12	7 5/8	10 1/16	1	3 x 4.1	65
184 - 765	1/2	5 11/16	19 11/16	12 1/2	8 5/8	4 1/2	1 7/8	15	11 5/8	10 1/2	1	4 x 5.4	105
766 - 2402	5/8	4 1/4	19 11/16	13 5/8	8 5/8	4 1/2	1 7/8	22	11 5/8	11 1/2	1 1/4	6 x 10.5	220
	3/4	4 1/4											
2403 - 5663	1	4 1/8	22 13/16	15	8 5/8	5 1/4	2 5/8	33	11 5/8	12 7/16	1 1/2	10 x 15.3	350
	1 1/4	5 1/8											
5664 - 12140	1 1/2	3 5/8	25 1/4	17 5/16	12 3/4	5 3/4	3 1/8	44	18 3/8	14 7/16	2 1/8	12 x 20.7	975
	1 3/4	5 1/8											
12141 - 23659	1 3/4	4 1/16	26 5/8	20 7/8	12 3/4	7 1/4	4 5/8	58	18 3/8	17 7/8	2 7/8	15 x 33.9	1,550
	2	8 1/16											
	2 1/4	10 1/16											

*Rod Take Out (RTO) is for down travel [Add 6 inches for up travel]

Total Travel 6 1/2 to 8 inches

LOAD RANGE (lb.)	J-ROD	RTO*	A	B	C	D	E	F	L	M	N	CH (lb./ft)	WT (lb.)
25 - 151	1/2	9 3/16	21 1/4	14 1/2	6 5/8	5 9/16	2	12	7 5/8	12 5/16	1	3 x 4.1	75
152 - 632	1/2	8 7/16	22 1/4	15	8 5/8	5 9/16	2	15	11 5/8	12 3/4	1	4x 5.4	110
633 - 1985	1/2	7 1/16	22 1/4	16	8 5/8	5 9/16	2	22	11 5/8	13 5/8	1 1/4	6x 10.5	245
	5/8	7 1/16											
	3/4	7 1/16											
1986 - 4680	3/4	5 3/16	25 1/8	16 7/8	8 5/8	6 1/16	2 1/2	33	11 5/8	14 1/8	1 1/2	10 x 15.3	390
	1	7 1/16											
	1 1/4	8 3/16											
4681 - 10033	1 1/4	6 1/8	27 13/16	19 15/16	12 3/4	6 13/16	3 1/4	44	18 3/8	16 13/16	2 1/8	12 x 20.7	995
	1 1/2	6 3/8											
	1 3/4	7 7/8											
10034 - 19552	1 3/4	6 3/8	30 3/16	23 7/16	12 3/4	9 5/16	5 3/4	58	18 3/8	20 1/8	2 7/8	15 x 33.9	1,560
	2	10 3/8											
	2 1/4	12 3/8											

*Rod Take Out (RTO) is for down travel [Add 8 inches for up travel]

CONSTANTS_100.XLS-09/17/09

FIG. PTP 100-G CONSTANT

www.pipingtech.com/ptp100-g

Total Travel 8 1/2 to 10 inches

LOAD RANGE (lb.)	J-ROD	RTO*	A	B	C	D	E	F	L	M	N	CH (lb./ft)	WT (lb.)
21 - 125	1/2	10 3/16	23 3/4	16 5/8	6 5/8	6 5/8	2 1/8	12	7 5/8	14 1/4	1	3 x 4.1	90
126 - 522	1/2	9 1/2	24 13/16	16 7/8	8 5/8	6 5/8	2 1/8	15	11 5/8	14 3/8	1	4 x 5.4	125
523 - 1640	1/2	8 1/16	24 3/4	18	8 5/8	6 5/8	2 1/8	22	11 5/8	15 3/8	1 1/4	6 x 10.5	270
	5/8	8 1/16											
	3/4	8 1/16											
1641 - 3868	3/4	5 13/16	27 1/4	18 3/4	8 5/8	6 7/8	2 3/8	33	11 5/8	15 3/4	1 1/2	10 x 15.3	390
	1	7 13/16											
3869 - 8292	1 1/4	6 13/16	29 7/8	21 3/4	12 3/4	7 3/8	2 7/8	44	18 3/8	18 3/8	2 1/8	12 x 20.7	1,005
	1 1/2	7 1/16											
8293 - 16159	1 1/2	5 5/16	31 1/16	23 15/16	12 3/4	8 5/8	4 1/8	58	18 3/8	20 1/2	2 7/8	15 x 33.9	1,570
	1 3/4	6 13/16											
	2	10 13/16											

*Rod Take Out (RTO) is for down travel [Add 10 inches for up travel]

Total Travel 10 1/2 to 12 inches

LOAD RANGE (lb.)	J-ROD	RTO*	A	B	C	D	E	F	L	M	N	CH (lb./ft)	WT (lb.)
17 - 103	1/2	10 15/16	26 3/8	19	6 5/8	7 5/8	2 1/4	12	7 5/8	16 3/8	1	3 x 4.1	105
104 - 432	1/2	10 1/8	27 3/8	19 1/2	8 5/8	7 5/8	2 1/4	15	11 5/8	16 3/4	1	4 x 5.4	140
433 - 1491	1/2	8 15/16	27 3/8	20 1/8	8 5/8	7 5/8	2 1/4	22	11 5/8	17 5/16	1 1/4	6 x 10.5	290
	5/8	8 15/16											
1492 - 3197	3/4	6 5/8	29 3/4	21	8 5/8	7 5/8	2 1/4	33	11 5/8	17 13/16	1 1/2	10 x 15.3	420
	1	8 5/8											
3198 - 6853	1	6 11/16	32 1/2	23 7/8	12 3/4	8 3/8	3	44	18 3/8	20 5/16	2 1/8	12 x 20.7	1,055
	1 1/4	7 11/16											
	1 1/2	7 15/16											
6854 - 13354	1 1/2	6 3/16	33 5/8	26 1/8	12 3/4	9 5/8	4 1/4	58	18 3/8	22 1/2	2 7/8	15 x 33.9	1,570
	1 3/4	7 11/16											

*Rod Take Out (RTO) is for down travel [Add 12 inches for up travel]

Total Travel 12 1/2 to 14 inches

LOAD RANGE (lb.)	J-ROD	RTO*	A	B	C	D	E	F	L	M	N	CH (lb./ft)	WT (lb.)
17 - 94	1/2	11 15/16	28 5/8	20 15/16	6 5/8	8 1/2	2 1/8	12	7 5/8	18 1/8	1	3 x 4.1	120
95 - 392	1/2	11 3/16	29 11/16	21 1/2	8 5/8	8 1/2	2 1/8	15	11 5/8	18 5/8	1	4 x 5.4	160
393 - 1232	1/2	9 11/16	29 11/16	22 11/16	8 5/8	8 1/2	2 1/8	22	11 5/8	19 5/8	1 1/4	6 x 10.5	320
	5/8	9 11/16											
1233 - 2906	5/8	7 11/16	32 5/16	23	8 5/8	8 3/4	2 3/8	33	11 5/8	19 9/16	1 1/2	10 x 15.3	485
	3/4	7 11/16											
	1	9 11/16											
2907 - 6230	1	7 5/8	34 3/4	26 1/16	12 3/4	9 1/4	2 7/8	44	18 3/8	22 5/16	2 1/8	12 x 20.7	1,120
	1 1/4	8 5/8											
	1 1/2	8 7/8											
6231 - 12140	1 1/2	6 15/16	35 1/2	27 13/16	12 3/4	10	3 5/8	58	18 3/8	24	2 7/8	15 x 33.9	1,570
	1 3/4	8 7/16											

*Rod Take Out (RTO) is for down travel [Add 14 inches for up travel]

CONSTANTS_100.XLS-09/17/09